OFFICE FURNITURE

CREATIVE ECO-FRIENDLY FUNCTIONAL HUMANITY HEALTHY

LEGEND
Perfect design comes from the lives

ISO-9001

GREENGUARD

Sit-Stand Desk



A healthier future

Sit-Stand Desk is a leading ergonomic products which designed for simple application and maximum comfort.
It gives a full range of supported mechanism to help you to stay active and agile while you are at work.
It is your next favourite desk!



Check out the latest Furniture Design Trends for today's Modern Workplace.

Healthier way at work

Sit-Stand Desk offers extensive functional specifications to provide comfort , ergonomic and health benefits of a user.
It is time to uplift your work day!

Leg Colour



White Gray Silver Graphite Black



Anti collision device

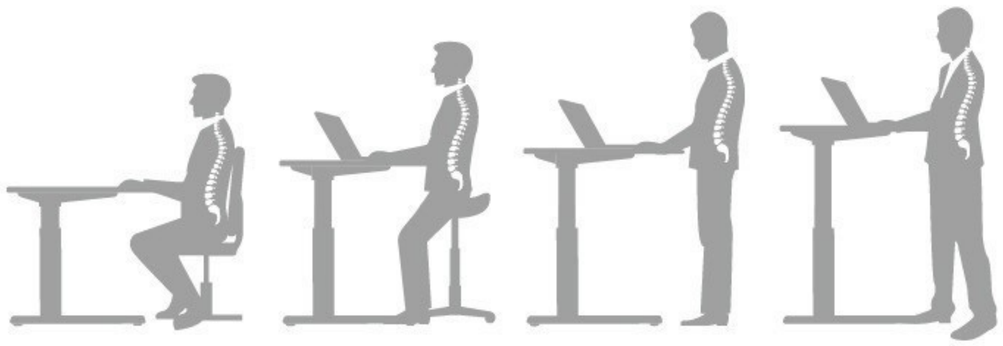



SPEED-15mm/SEC
LOADING CAPACITY-120KGS
(Including the worksurface weight)



SPEED-25mm/SEC
LOADING CAPACITY-80KGS
(Including the worksurface weight)

Standard KEYPAD



I Type-2



A Type-2



KEYPAD with digital height indicator with height memory



I Type-3



A Type-3



Wire capabilities: Wire tray and riser box.



Personalized spacese

Sit-Stand Desk is handsomely configurated for individual yet achieving interactive and ergonomic workspaces.



Feel Better. Work Better.

Personalized spacese

Sit-Stand Desk is uniquely configurated yet achieving interactive and ergonomic workspaces.



Personalized spaces

Sit-Stand Desk is professionally configurated yet achieving interactive and ergonomic workspaces.



Personalized spaces

Sit-Stand Desk is configurated with flexibility yet achieving interactive and ergonomic workspaces.



Feel Better. Work Better.

Personalized spaces

Sit-Stand Desk comes with multi functional configurations yet achieving interactive and ergonomic workspaces.

Sit And Work. Stand And Work

Change how you work forever. In seconds.



Integrated spaces

Sit-Stand Desk Can be configurated for individual workspace and personalized storages.



Individual spaces Planning styles

Sit-Stand Desk is individual standalone desks take healthful movement to a new level.





Good for the mind, the body and the way people work

Shared spaces

Sit-Stand Desk is handsomely configurated for individual yet achieving interactive and ergonomic workspaces.



Elevate your desk. Your Office. Your health. Your life.





Personalized spaces

Sit-Stand Desk is handsomely configurated
for individual yet achieving interactive and ergonomic workspaces.

Communicable spaces

Sit-Stand Desk is configurated for individual work desk and achieving interactive and ergonomic workspaces.



Elevate your desk.
Your Office.
Your health.
Your life.

Integrated spaces

Sit-Stand Desk can be configurated for individual workspace and personalized storages.

Enclosed spaces

Sit-Stand Desk is designed for individual work desk in an enclosed room for casual meeting and other functions.



Sitting or standing,
Sit-Stand desk follows your lead.



Enclosed spaces

Sit-Stand Desk is designed for individual work desk in an enclosed room for private meeting



Minimalist / Stylish Meeting

The modernized design allows a hint of surprise in the usually dull meeting conference.



Stable & Modern Conference table



CABINET >



LD-2鋼製二抽櫃 H71.5xW90xD45cm不含頂板
LD-3鋼製三抽櫃 H106.5xW90xD45cm不含頂板



LD-2鋼木二抽櫃 H71.5xW90xD45cm不含頂板
LD-3鋼木三抽櫃 H106.5xW90xD45cm不含頂板



LR-2鋼製捲門櫃 H71.5xW90xD45cm不含頂板
LR-3鋼製捲門櫃 H106.5xW90xD45cm不含頂板



LS-2鋼製二層拉門櫃 H71.5xW90xD45cm不含頂板
LS-3鋼製三層拉門櫃 H106.5xW90xD45cm不含頂板



LWS-2鋼木二層拉門櫃 H71.5xW90xD45cm不含頂板
LWS-3鋼木三層拉門櫃 H106.5xW90xD45cm不含頂板



LO-2鋼製二層開門櫃 H71.5xW90xD45cm不含頂板
LO-3鋼製三層開門櫃 H106.5xW90xD45cm不含頂板



LWO-2鋼木二層開門櫃 H71.5xW90xD45cm不含頂板
LWO-3鋼木三層開門櫃 H106.5xW90xD45cm不含頂板



LB-2鋼製二層空櫃 H71.5xW90xD45cm不含頂板
LB-3鋼製三層空櫃 H106.5xW90xD45cm不含頂板



LH-2側拉櫃(矮) H71.5xW40xD70cm
LH-3側拉櫃(高) H110xW40xD70cm



二抽薄邊活動櫃 H51xW42xD48cm



二抽薄邊活動櫃(密碼鎖) H51xW42xD48cm



NT 二抽活動櫃(坐墊) H57xW40xD48cm



NT 二抽活動櫃(坐墊、密碼鎖) H57xW40xD48cm



NT 二抽活動櫃 H52xW40xD48cm



NT 二抽活動櫃(密碼鎖) H52xW40xD48cm

OPTIONAL ACCESSORIES

Less is more the stroongly supporting simplicity and opposing over-decoration conception of design explicitly made the best explanation for simple style.


緩降毛刷盒


緩降毛刷盒（雙開）


緩降毛刷蓋

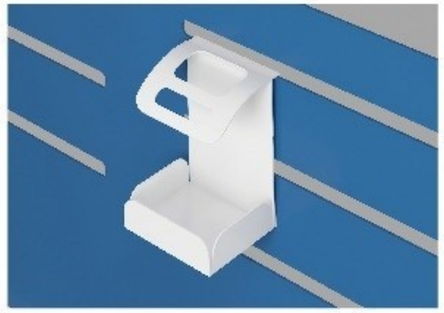
文具組-筆筒

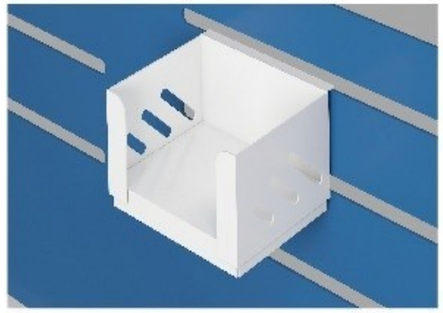
文具組-便條紙盒

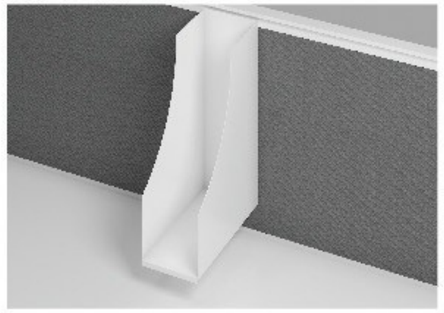
文具組-直立式文件盒


文具組-橫式文件盒

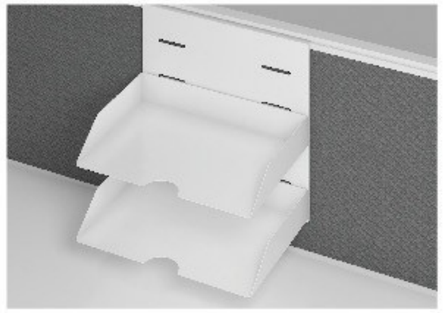
文具組-雙層文件盒

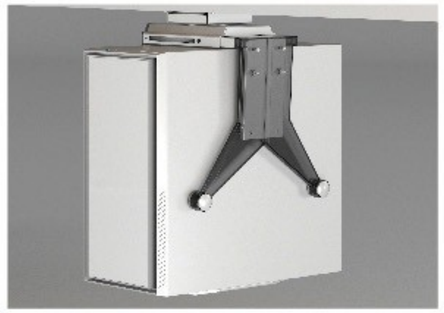
主機吊架（雙邊外側）


主機吊架（雙邊內側）


桌屏鋁框


文具組-薄型抽屜 DR-G02-1 H3.4xW58xD25.6cm

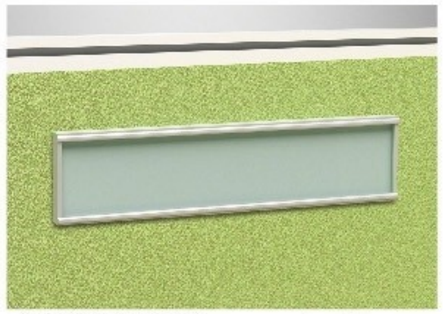
鋁質名牌(強力吸鐵) H4.5xW40xD0.9cm

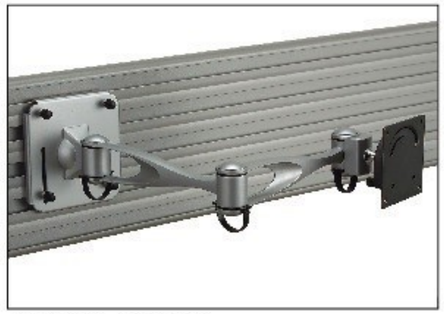
螢幕支架（掛軸型）


螢幕支架（桌上型 ）

OFFICE FURNITURE

CREATIVE ECO-FRIENDLY FUNCTIONAL HUMANITY HEALTHY

LEGEND
Perfect design comes from the lives

ISO-9001